WIRING DIAGRAM

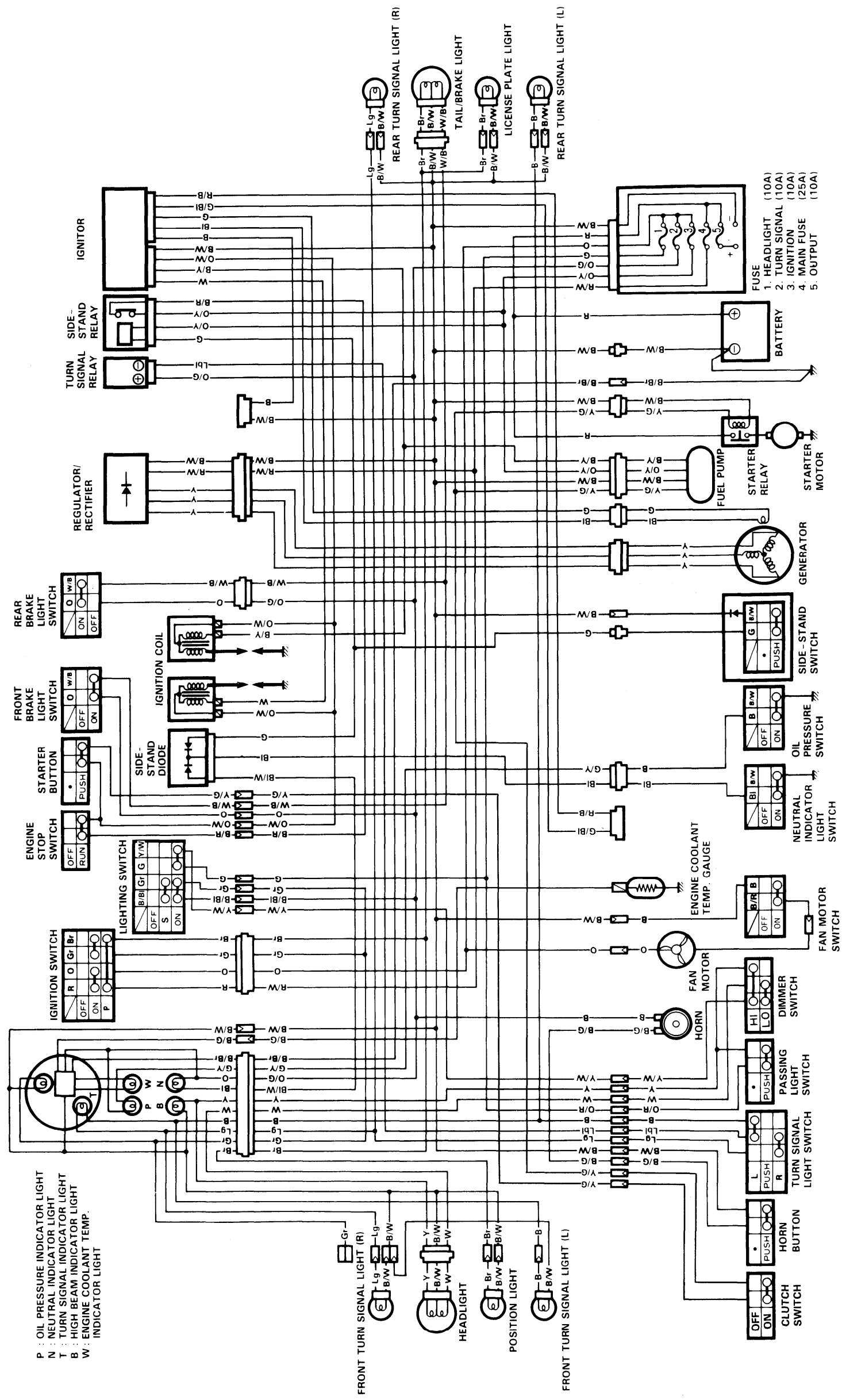

WIRE COLOR

B : Black	R : Red	B/Y : Black with Yellow tracer	O/W : Orange with White tracer
Bl : Blue	Y : Yellow	Bl/W : Blue with White tracer	R/B : Red with Black tracer
Br : Brown	W : White	G/Y : Green with Yellow tracer	R/W : Red with White tracer
G : Green	B/Bl : Black with Blue tracer	G/Bl : Green with Blue tracer	Y/G : Yellow with Green tracer
Gr : Gray	B/Br : Black with Brown tracer	O/B : Orange with Black tracer	Y/W : Yellow with White tracer
Lbl : Light blue	B/G : Black with Green tracer	O/G : Orange with Green tracer	W/B : White with Black tracer
Lg : Light green	B/R : Black with Red tracer	O/R : Orange with Red tracer	
O : Orange	B/W : Black with White tracer	O/Y : Orange with Yellow tracer	

*** The clutch switch is newly installed.**